COLUMBUS STEEL CASTINGS RESERVES THE RIGHT TO MODIFY DETAILS NOT AFFECTING APPLICATION OR STRENGTH IF NECESSARY TO FACILITATE MANUFACTURE.

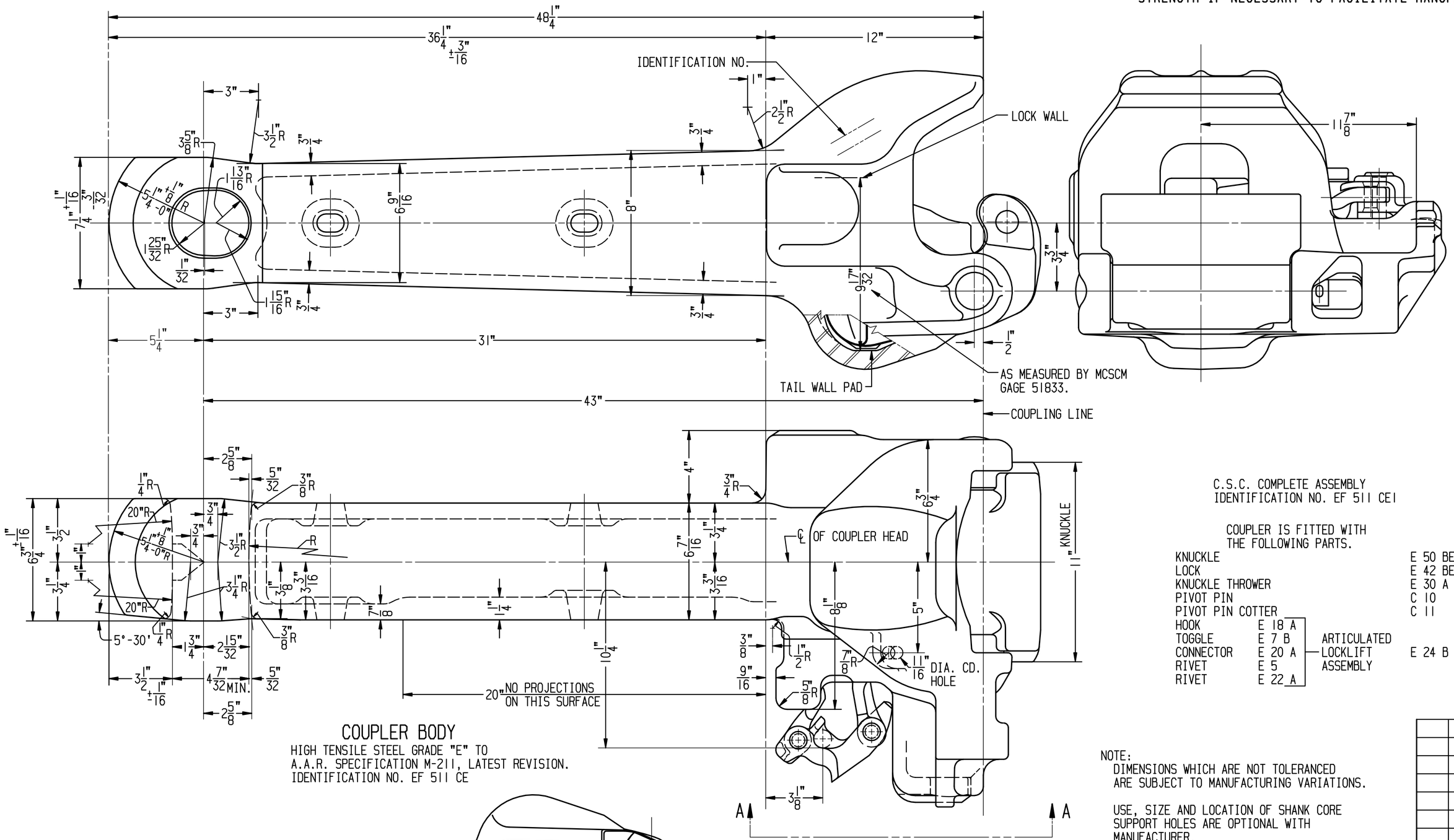

C.S.C. COMPLETE ASSEMBLY
IDENTIFICATION NO. EF 511 CE

COUPLER IS FITTED WITH THE FOLLOWING PARTS.

KNUCKLE			E 50 BE
LOCK			E 42 BE
KNUCKLE THROWER			E 30 A
PIVOT PIN			C 10
PIVOT PIN COTTER			C 11
HOOK	E 18 A	ARTICULATED LOCKLIFT ASSEMBLY	
TOGGLE	E 7 B		
CONNECTOR	E 20 A		E 24 B
RIVET	E 5		
RIVET	E 22 A		

COUPLER BODY

HIGH TENSILE STEEL GRADE "E" TO
A.A.R. SPECIFICATION M-211, LATEST REVISION.
IDENTIFICATION NO. EF 511 CE

NOTE:
DIMENSIONS WHICH ARE NOT TOLERANCED ARE SUBJECT TO MANUFACTURING VARIATIONS.

USE, SIZE AND LOCATION OF SHANK CORE SUPPORT HOLES ARE OPTIONAL WITH MANUFACTURER.

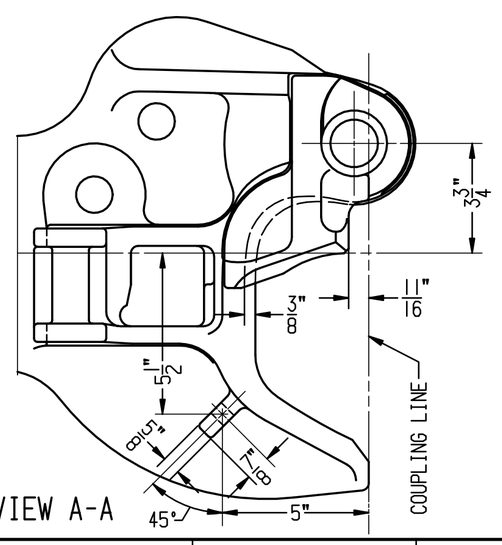

VIEW A-A

COUPLER AND PARTS ARE PATENTED.

REV.	DATE
A	2-26-04

REFERENCE ONLY

TYPE E/F BOTTOM SHELF REDUCED SLACK COUPLER
SINGLE ROTARY OPERATION
IDENTIFICATION NO. EF 511 CE

Columbus Steel Castings
Columbus, Ohio

DRAWN BY	CHECKED BY		DATE 5-24-2002
M.H.G.	B.S.		SCALE 3" = 1'-0"
C-14778			SHEET 1 OF 1

THIS DRAWING CONTAINS CONFIDENTIAL AND PROPRIETARY INFORMATION OF COLUMBUS STEEL CASTINGS ("COLUMBUS STEEL") AND THE DRAWING AND THE INFORMATION CONTAINED THEREIN ARE AND REMAIN THE PROPERTY OF COLUMBUS STEEL. THIS DRAWING IS PROVIDED WITH THE EXPRESS AGREEMENT THAT THE DRAWING AND THE INFORMATION THEREIN:

(1) WILL NOT BE REPRODUCED, COPIED OR OTHERWISE TRANSCRIBED, IN WHOLE OR IN PART, BY ANY METHOD;

(2) WILL NOT BE USED, IN WHOLE OR IN PART, DIRECTLY OR INDIRECTLY, TO ASSIST IN THE MAKING OR TO FURNISH ANY INFORMATION FOR THE MAKING, OF DRAWINGS, PRINTS, APPARATUS OR PARTS;

(3) WILL NOT BE MADE AVAILABLE TO ANY OTHER PERSON OR ENTITY, IN EACH CASE WITHOUT THE PRIOR WRITTEN CONSENT OF COLUMBUS STEEL AS TO EACH SPECIFIC CASE; AND

(4) WILL BE RETURNED TO COLUMBUS STEEL UPON ITS REQUEST.

ACCEPTANCE OF THIS DRAWING SHALL CONSTITUTE ACCEPTANCE OF THE FOREGOING AGREEMENTS.

COPIED FROM C-14769